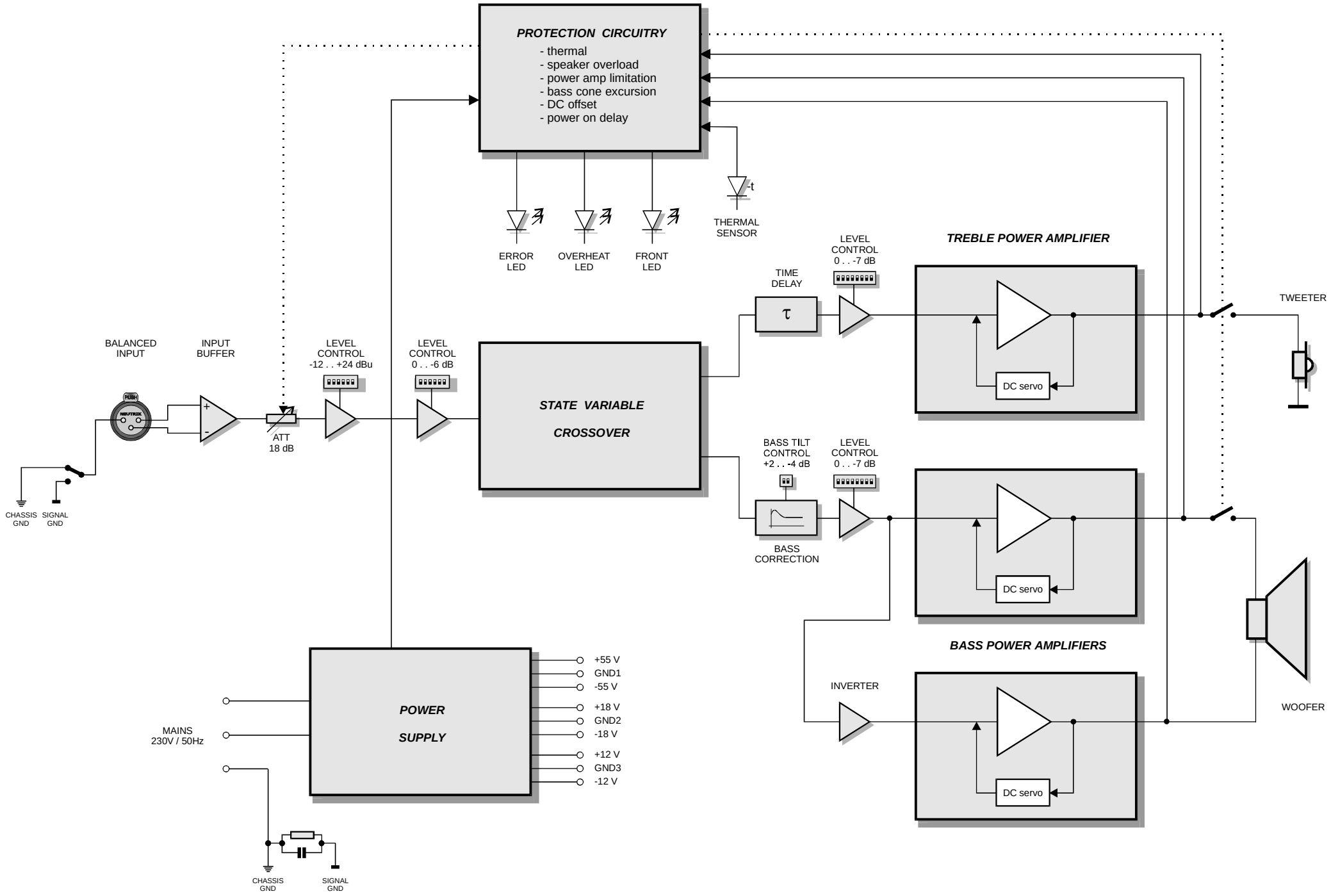ACON A823 BLOCK DIAGRAM